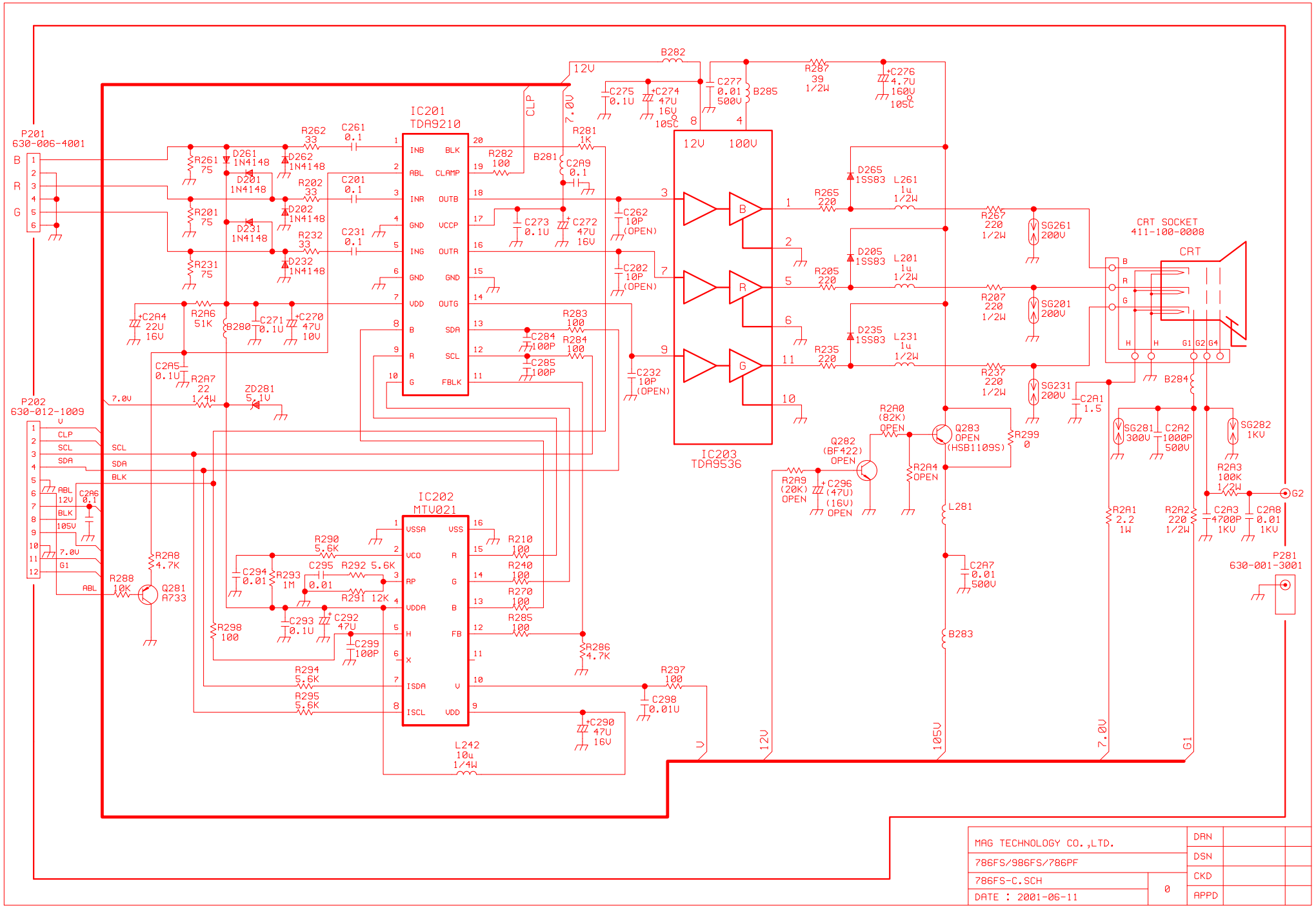

MAG TECHNOLOGY CO.,LTD.		DRN	
786FS/986FS/786PF		DSN	
786FS-C.SCH	0	CKD	
DATE : 2001-06-11		APPD	